Diesel Exhaust Fluid Submersible Turbine Pump Kits

FE Petro™ brand diesel exhaust fluid (DEF) submersible turbine pump (STP) kits feature an all-stainless steel design that makes them completely compatible to transfer DEF/AdBlue®. Kits are available as complete variable length assemblies or as individual assembly kits for fixed length applications, providing everything needed for a DEF/AdBlue® pumping application.

Highlights

Pump Motor Assembly

- Field-proven Franklin Electric encapsulated motor ensures longevity and impermeability to DEF seepage.
- Heavy-duty shaft provides superior alignment and resistance to stress.
- Double mechanical shaft seals protect the oil-filled bearing chamber from DEF seepage, ensuring minimal wear and proper bearing lubrication.
- Stainless steel hydraulics provide superior performance and efficiency.
- EPDM jacketed power cable provides DEF compatibility and longevity.
- All models are suitable for vertical installation where the pump motor is suspended off the bottom of the tank by the discharge piping.

Submersible Turbine Pump Kit

- Submersible turbine pump kits come complete with variable length column pipe kit, check valve kit, bypass kit, EZ FIT pump motor assembly connection kit, and pump motor assembly.
- Submersible turbine pump kits also available for locally supplied fixed length column pipe applications.
- Bypass relief valve creates a continuous bypass of fluid to keep the motor cool.
- Check valve maintains line pressure while the pump is not in operation.
- EZ FIT PMA connection makes disconnection and reconnection of the PMA quick and easy.
- Each EZ FIT connection comes complete with coupler and gasket to ensure tight connection.

Specificaitons

Pump Motor Assembly

- Materials: Stainless steel construction including impellers/diffusers, inlet/outlet, and outer shell
- Pump type: All models are 5.1" (130 mm) outside diameter centrifugal type pump
- Power cable: 32.8' (10 m) EPDM jacketed plug-in power cable
- 50 Hz pump motor: Three-stage pump with 2" BSPT female outlet
- Motor rating: Continuous operation with motor cooling provided by product flow and protected from dry running

Submersible Turbine Pump Kit

- All stainless steel hardware and Viton® or EPDM seals
- Bypass relief valve cracking pressure of 30-40 psi (2.1-2.8 bar) and 4 gpm (15 lpm) minimum flow at the discharge of all models
- Non-return check valve cracking pressure of 3 psi (0.2 bar) between product piping and bypass relief valve of all models
- Liquid compatibility: All models are intended for use with Diesel Exhaust Fluid (DEF). DEF is a non-flammable, non-combustible liquid that has a specific gravity of 1.09 at 68˚F (20˚C), and is made per ISO 22241-1 specifications with 32.5% urea and distilled or deionized water. As defined by ISO 22241-1, DEF is the same as AUS 32® (aqueous urea solution) and also commonly known as AdBlue®

Variable Length Range

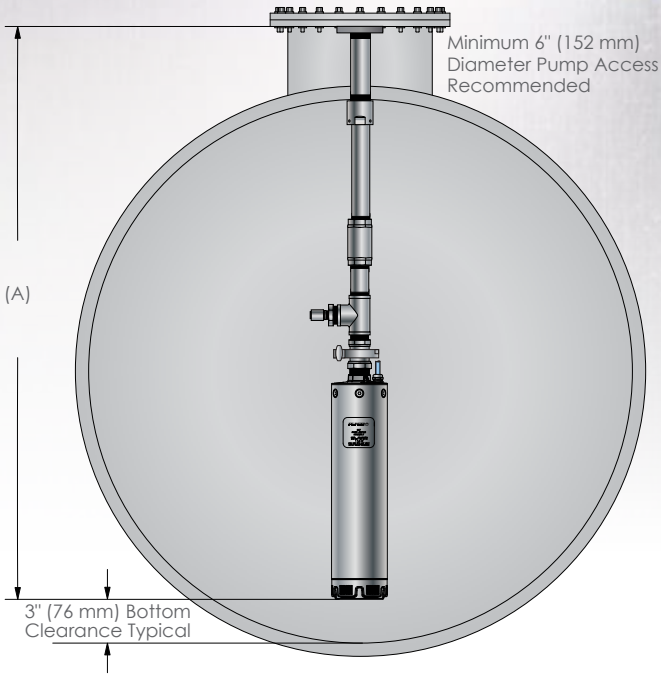

Variable Length Range (A)

Model Length Range	Model Length Designation
71" - 104" (1,800 mm - 2,640 mm)	VL1
104" - 168" (2,640 mm - 4,265 mm)	VL2

Pump Motor Performance

DEF-PMA150B (Single Phase) and DEF-PMA150C (Three Phase)

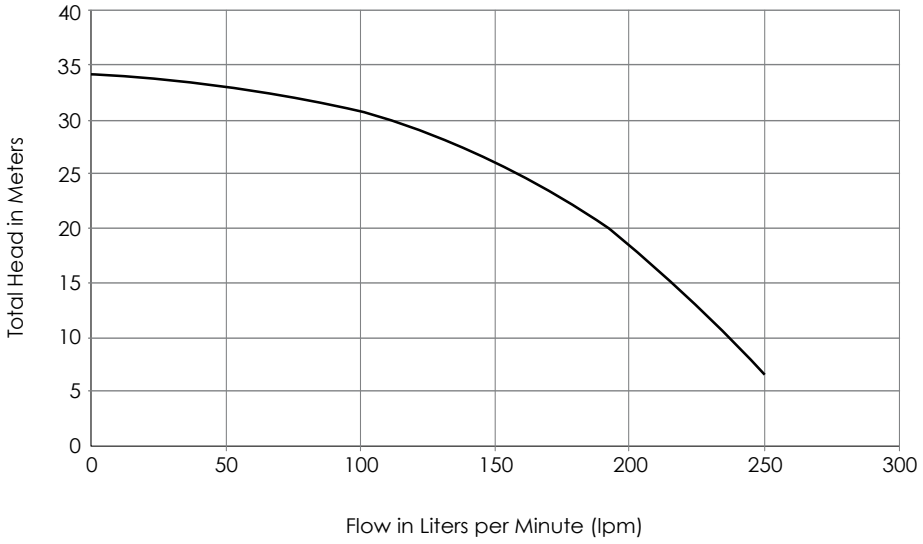

Note: Performance is based on pumping water (1.00 specific gravity). Pressure is taken at the discharge outlet of the pump motor.

Ordering Information

Variable Length Diesel Exhaust Fluid Submersible Turbine Pump Kits

Each variable length submersible turbine pump kit comes complete with variable length column pipe kit (VL1 or VL2), check valve kit, bypass kit, EZ FIT pump motor assembly connection kit, and pump motor assembly (single or three phase).

Model	Description
403472901	50 Hz, single phase, VL1 71" - 104" (1,800 mm - 2,640 mm) variable length diesel exhaust fluid submersible turbine pump kits (includes components #1 - #5 below)
403473901	50 Hz, single phase, VL2 104" - 168" (2,640 mm - 4,265 mm) variable length diesel exhaust fluid submersible turbine pump kits (includes components #1 - #5 below)
403475901	50 Hz, three phase, VL1 71" - 104" (1,800 mm - 2,640 mm) variable length diesel exhaust fluid submersible turbine pump kits (includes components #1 - #4 and #6 below)
403476901	50 Hz, three phase, VL2 104" - 168" (2,640 mm - 4,265 mm) variable length diesel exhaust fluid submersible turbine pump kits (includes components #1 - #4 and #6 below)

Variable Length Components

1. Variable length column pipe kit (not sold separately)
2. Check valve kit
3. Bypass kit
4. Pump motor assembly connection kit
5. 6 Pump motor assembly (single or three phase)

Variable Length Diesel Exhaust Fluid Submersible Turbine Pump Replacement Kits

Item #	Model	Description
2	403463901	Check valve kit (includes 1½" NPT non-return check valve, 1½" NPT x 4" long nipple on inlet, and 2" NPT female x 2" BSP male adapter on outlet)
3	403461901	Bypass kit (includes ½" NPT bypass relief valve, ½" NPT x 1½" NPT bushing in 1½" NPT tee)
4	403455901	Pump motor assembly connection kit (includes 2" BSP male inlet x 1½" NPT male outlet EZ FIT connection
5	403383953	50 Hz, single phase pump motor assembly (DEF-PMA150B)
6	403383963	50 Hz, three phase pump motor assembly (DEF-PMA150C)

Variable Length Accessories & Repair Parts

Model	Description
400170937	Capacitor, 30 uF / 440 V (for use with DEF-PMA150B)
400818922	Single Phase 200-250 volt pump control with 240 volt coil
401220966	Three phase 380-415 volt pump control box with overload protection and 240 volt coil
403459901	2" NPT female x 2" BSP male thread adapter (part of component #1, adapter only)
403408931	1½" NPT non-return check valve (part of component #2, valve only)
403409931	½" NPT bypass relief valve (part of component #3, valve only)
403468901	DEF-PMA hardware pack (part of components #5 or #6, includes cable grip, cable ties, and documentation)

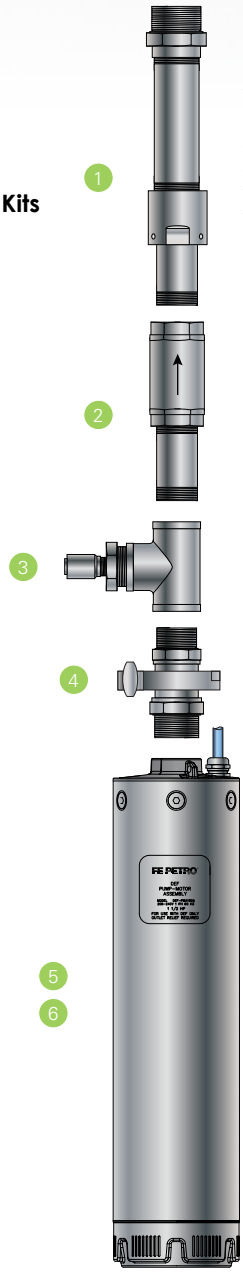

Variable length column pipe kit reduces from 2" BSP column pipe at the top to an 1½" NPT column pipe at the bottom connection to the check valve kit

Ordering Information continued

Fixed Length Components

1. Column pipe (locally supplied)
2. Check valve kit
3. Bypass kit
4. Pump motor assembly connection kit
5. 6 Pump motor assembly (single or three phase)

Fixed Length Diesel Exhaust Fluid Submersible Turbine Pump Kits

Individual assembly kits can be ordered for fixed length submersible turbine pump kit applications.

Item #	Model	Description
2	403465901	Check valve kit (includes 2" NPT non-return check valve, 2" NPT x 4" long nipple on inlet, and 2" NPT male x 2 " BSP female adapter on outlet)
3	403462901	Bypass kit (includes ½" NPT bypass relief valve, ½" NPT x 2" NPT bushing in 2" NPT tee)
4	403457901	Pump motor assembly connection kit (includes 2" BSP male inlet x 2" NPT male outlet EZ FIT connection
5	403383953	50 Hz, single phase pump motor assembly (DEF-PMA150B)
6	403383963	50 Hz, three phase pump motor assembly (DEF-PMA150C)

Fixed Length Accessories & Repair Parts

Model	Description
400170937	Capacitor, 30 uF / 440 V (for use with DEF-PMA150B)
400818922	Single Phase 200-250 volt pump control with 240 volt coil
401220966	Three Phase 380-415 volt pump control box with overload protection and 240 volt coil
403460901	2" NPT Male x 2" BSP Female Thread Adapter (part of component #2, adapter only)
403458901	2" NPT x 4" long Pipe Nipple (part of component #2, nipple only)
403408932	2" NPT non-return check valve (part of component #2, valve only)
403409931	1/2" NPT bypass relief valve (part of component #3, valve only)
403468901	DEF-PMA Hardware Pak (part of component #5 or #6, includes cable grip, cable ties, and documentation)

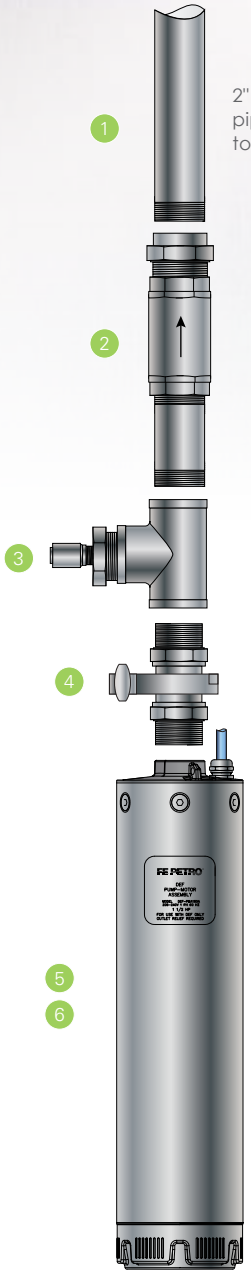

FE PETRO®
A Franklin Fueling Systems Brand
franklinfueling.com
3760 Marsh Rd. • Madison, WI 53718, USA
Tel: +1 608 838 8786 • Fax: +1 608 838 6433
Tel: USA & Canada +1 800 225 9787 • Tel: UK +44 (0)1473 243300
Tel: Mex 001 800 738 7610 • Tel: FR +33 (0)1 69 21 41 41 • Tel: CH +86 10 8565 4566

PEI MEMBER apea working for a safer environment

AdBlue® is a registered trademark of Verband der Automobilindustrie.
Viton® is a registered trademark of E. I. du Pont de Nemours and Company. AUS 32® is a registered trademark of GBZI Ltd.